REV.	CHANGE CONTENT	BY	DATE

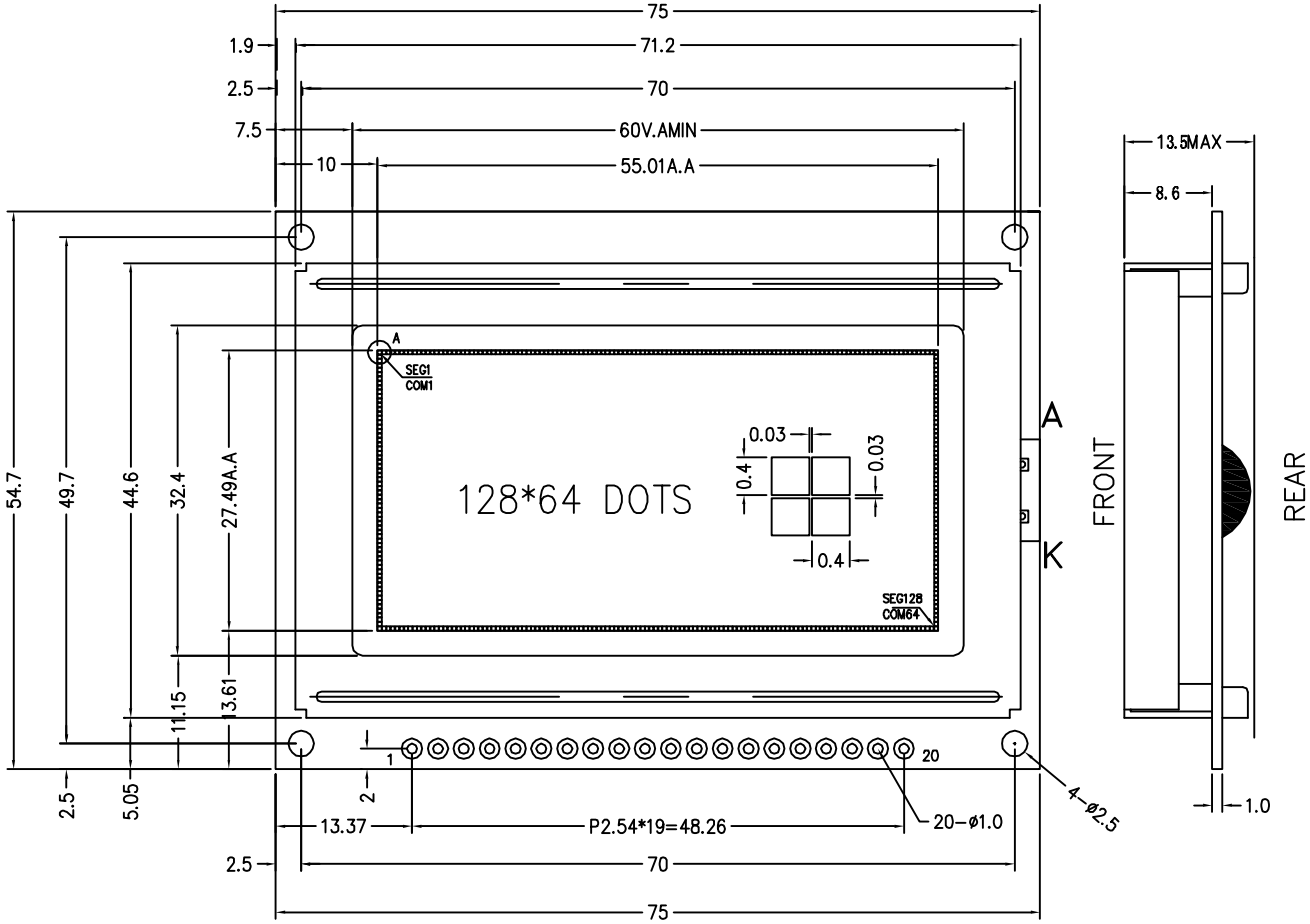

Pins Description

Pin No.	Symbol	Description
1	VDD	Power Supply Pin :+5.0V
2	VSS	Ground
3	V0	LCD Operation Voltage
4-11	D0-D7	Data Bus
12	/CS1	Chip1 enable signal,active"L"
13	/CS2	Chip2 enable signal,active"L"
14	/RST	Reset: L: Enable; H: Disable
15	/WR	H:read,L:Write
16	C/D	L:Data; H:Instruction
17	E	Enable signal
18	VOUT	-
19	K	LED-
20	A	LED+

NOTE:

1. DISPLAY TYPE: STN-POSITIVE-TRANSFLECTIVE-Y/G
2. VIEWING DIR.: 6:00
3. DRIVE METHOD: 1/64DUTY, 1/9BIAS, Vop=10.5V,VDD=5.0V
4. OP. TEMP.: -20°C~70°C
5. ST. TEMP.: -30°C~80°C
6. WITH HIGH TRANSMISSIVE AND HIGH REFLECTIVE POL
7. ANTI-UV FILTER
8. CONTROLLER:S6B0107
9. BACKLIGHT: LED COLOR-Y/G,接口电压5.0±0.2V,If=120mA,

华远显示 H-M DISPLAY

深圳市华远显示器件有限公司
SHENZHEN HUAYUAN DISPLAY CO.,LTD

DESIGN	LZM	06.4.23	STANDARD		
CHECKED			TECHNOLOGY		
APPROVED			Q.A		

DRAWING No.: HG1286418C-YF62L-VA
DRAWING TITLE: LCM DRAWING
FILE NO: 8
REV.: A
SCALE: -
PROJECTION:
UNIT: mm
SHEET: 1/1