REV.	CHANGE CONTENT	BY	DATE

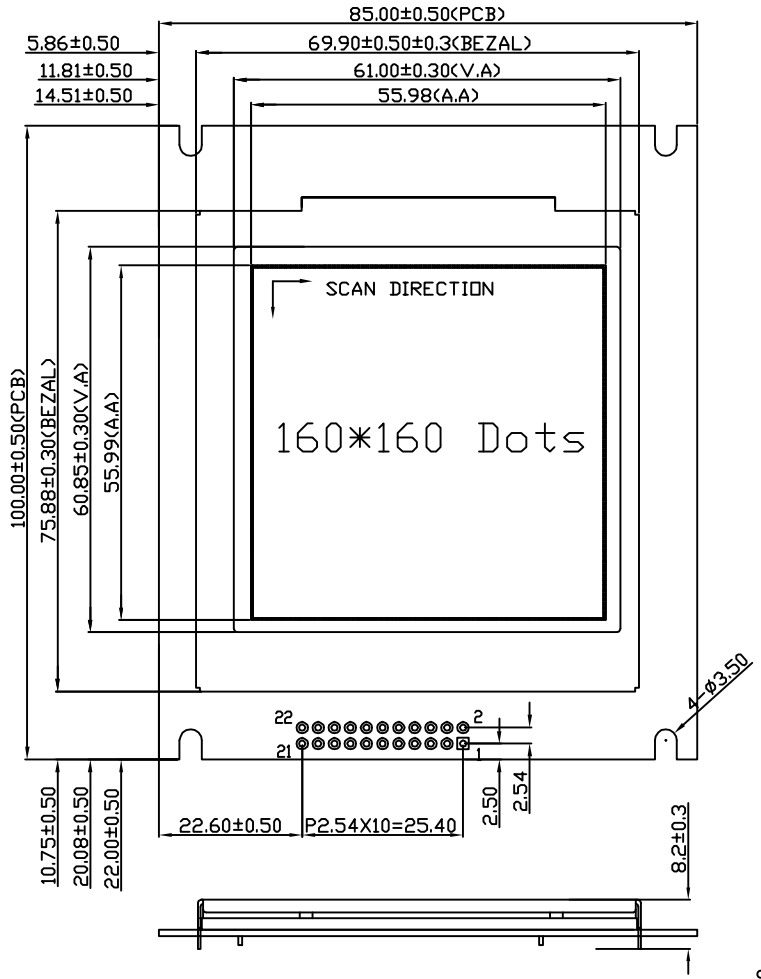

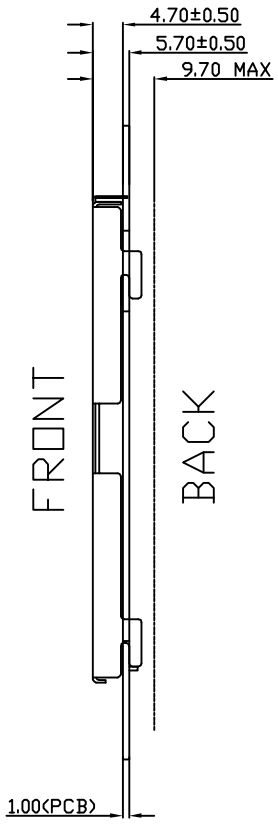

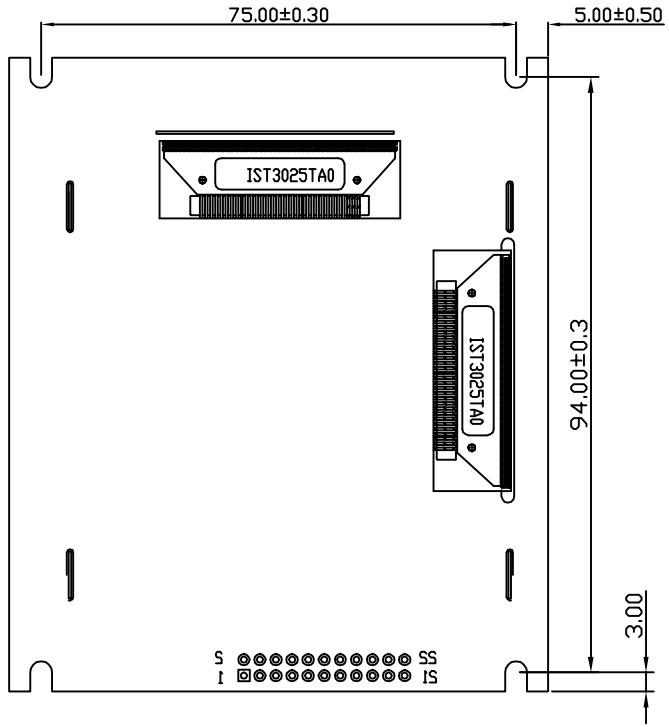

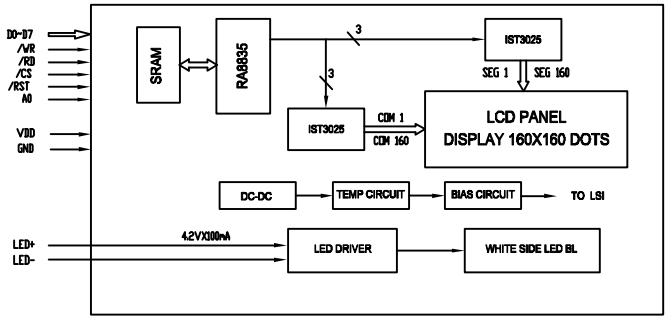

NOTE:
1. FSTN POSITIVE TRANSFLECTIVE
2. 1/160DUTY, 1/13BIAS,VOP=18.4V,VDD=5.0V
3. View Direction : 6:00
4. LCD Driver : IST3025
5. LCD Controller : RA8835A
5. OP. TEMP: -25°C TO +70°C
6. ST. TEMP: -30°C TO +80°C
7. BackLight: LED WHITE VF=4.2±0.2V,IF=90mA
8. RoHS

华远显示 H-M DISPLAY

深圳市华远显示器件有限公司
SHENZHEN HUAYUAN DISPLAY CO.,LTD

DESIGN	JHG	20080515	STANDARD			
CHECKED			TECHNOLOGY			
APPROVED			Q.A			

DRAWING No. : HG16016004T-FF62L-VF
DRAWING TITLE: LCM DRAWING
FILE NO. : 7
REV. : A
SCALE : -
PROJECTION:
UNIT : MM
SHEET : 1/1